Mod. T 14 G

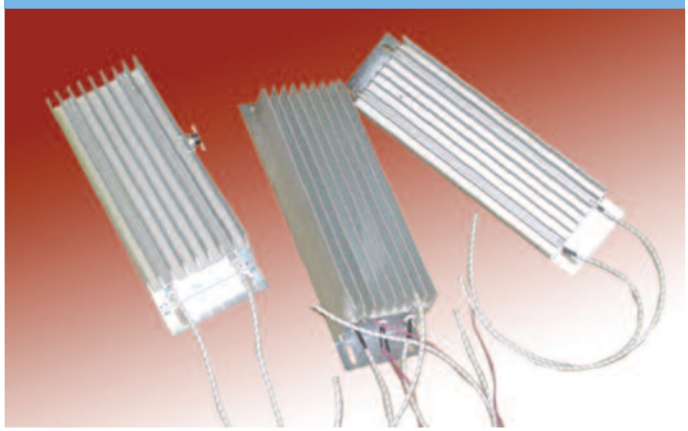

The T 14 G series power resistors are made of specific resistive elements inserted and cemented in an anodized IP54 aluminum box. These materials are fireproof and in case of failure, the aluminum box is leakage proof. The shape of the box allows reaching high powers, since the extremely high dissipation level allows the highest possible dissipation and absorption of large amounts of impulsive energy. These resistors can be used inside electrical panels, mounted on dissipaters of metallic plate.
Extremely convenient dimension vs performance ratio.
Extremely noise controlled, RHOS compliant, CE Marked.
TYPICAL APPLICATION: power electronics for inverter controlled breaking motors; drives.
SPECIAL APPLICATION: with thermostat

TYPE	DIMENSIONS			
	A	B	C	H
T14G/800	180	210	240	84
T14G/1200	245	275	305	84
T14G/2000	295	325	355	84

ELECTRICAL CHARACTERISTICS				
TYPE	POWER		RESISTANCE	
	MAX	WATT	Min. OHM	MAX OHM
T14G/800	800	500	5	250
T14G/1200	1200	650	5	400
T14G/2000	2000	800	8	600

MAX POWER USE: up to 60 minutes - TOLERANCE VALUE: +/- 10%; +/- 5%; +/- 2% - TENSION LIMIT 2000V - ISOLATION RESISTANCE: > 500Mohm @ 500VDC - ELECTRICAL ISOLATION: 500Hz 60" 3500V -MAX TEMPERATURE: 300°C - CONNECTION WIRES: 350mm – vitreous silicon rubber wire TS2V CU/NI 4mm section up to 250°C@500V resistant compliant with IEC EN 60228 cl5 & CEI EN 50363

WORK LOAD CYCLE				
TYPE	LOAD TIME PULSE CYCLE 120"			
	3"	12"	36"	60"
	W	W	W	W
T14G/800	14000	4500	1700	1000
T14G/1200	16000	4800	2000	1400
T14G/2000	20000	5700	2600	2100

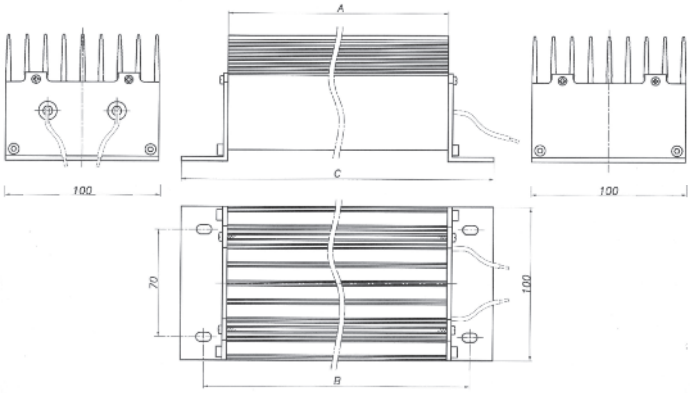

Mod. T 15

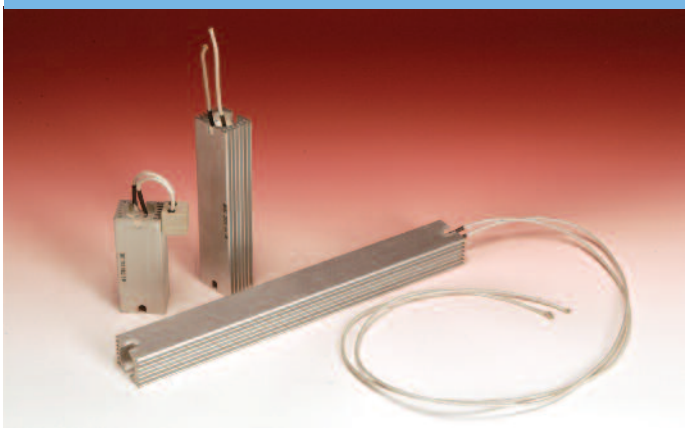

The T 15 series power resistors are made of specific resistive elements inserted and cemented in an anodized IP54 aluminum box. These materials are fireproof and in case of failure, the aluminum box is leakage proof. The shape of the box allows reaching high powers, since the extremely high dissipation level allows the highest possible dissipation and absorption of large amounts of impulsive energy. These resistors can be used inside electrical panels, mounted on dissipaters of metallic plate.
TYPICAL APPLICATION: power electronics for inverter controlled breaking motors. SPECIAL APPLICATION: with thermostat; with DIN driving connectors; IP65 - Max Power Use, Tolerance Value, Tension limit, Isolation Resistance, Electrical Isolation, Max Temperature and Connection Wires: are the same of the T 14 G

ELECTRICAL CHARACTERISTICS							
TYPE		T 15/100	T 15/160	T 15/200	T 15/250	T 15/300	T 15/400
Nominal Power to 20°C	W	100	160	200	250	300	400
R min - MAX	Ohm	0,3-6k	0,5-7k	4-8k	5-9k	10-10k	10-10k
Max absorbed energy	kJoule	3,5	5	8,5	10	12	15
Power pulse cycle 1-6"	W	100	160	200	250	300	400
Max tension	V	1000	1000	1000	1000	1000	1000
Dielectric rigidity	V eff.1 min	3000	3000	3000	3000	3000	3000
Insulation resistance 500Vcc	Mohm	>=500	>=500	>=500	>=500	>=500	>=500
Max temperature	°C	350	350	350	350	350	350

MECHANICAL DIMENSIONS							
WIRES LENGHT	mm	250	250	250	250	250	250
Fixing slots diameter	mm	5,3	5,3	5,3	5,3	5,3	5,3
Quota A	mm	36	36	36	36	36	36
Quota B	mm	27	27	27	27	27	27
Quota C	mm	90	145	170	190	250	290
Quota L	mm	100	155	180	200	260	300
Middleweight	gr	150	180	210	290	400	500

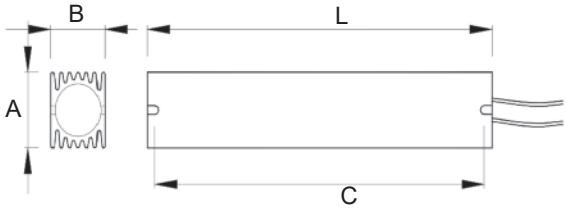

SPECIAL RE